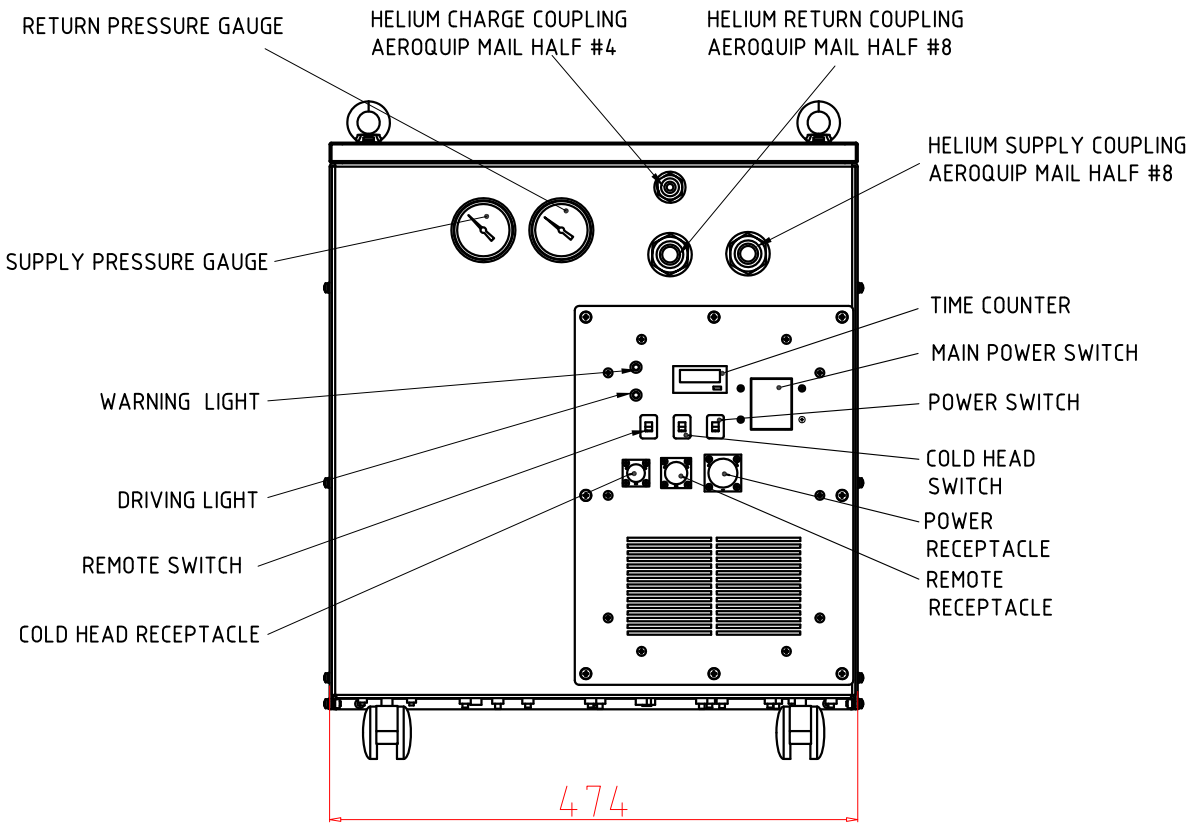
RETURN PRESSURE GAUGE
HELIUM CHARGE COUPLING
AEROQUIP MAIL HALF #4
HELIUM RETURN COUPLING
AEROQUIP MAIL HALF #8
HELIUM SUPPLY COUPLING
AEROQUIP MAIL HALF #8
SUPPLY PRESSURE GAUGE
TIME COUNTER
MAIN POWER SWITCH
WARNING LIGHT
POWER SWITCH
COLD HEAD
SWITCH
DRIVING LIGHT
POWER
RECEPTACLE
REMOTE SWITCH
REMOTE
RECEPTACLE
COLD HEAD RECEPTACLE
474

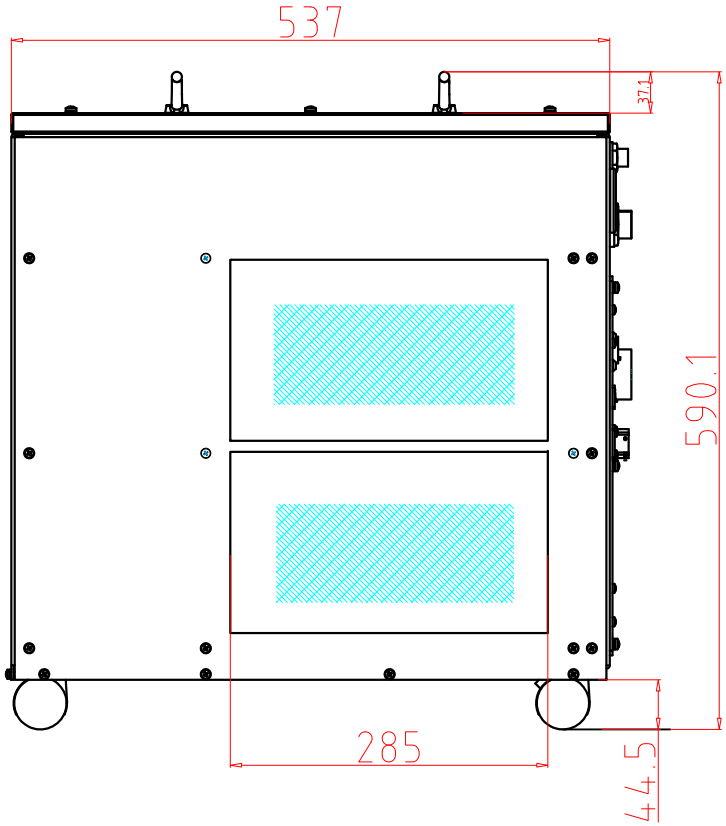
537
37.1
590.1
285
44.5